KAOKO ™ CRUISE CONTROL KIT : CCF910

BMW F700GS (2013-) & F800GS/A (2013-)
with
Factory-OEM Handguards to BMW part # 7732 8 532 949

SABS DESIGN EXCELLENCE AWARDS 2009

Patents
"U.S. Pat. No. US D593,462 S"
"U.S. Pat. No. US D593,463 S"
"U.S. Pat. No. US D593,464 S"

RSA Registered Designs
No. A2007/00202 No. A2007/00205
No. A2007/00203 No. A2007/00206
No. A2007/00204 No. A2007/00207

Hand guard Clamp Screws

Bar Weight removed

CCF910 Fitted

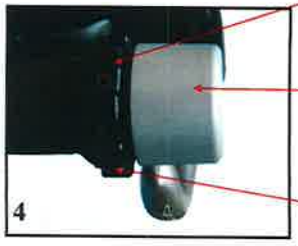

KAOKO™ Cruise Control Assembly

DISCLAIMER: NO RESPONSIBILITY ACCEPTED FOR NON-ADHERENCE TO THESE INSTRUCTIONS

KAOKO™ Safety Warning:

See: www.kaoko.com for further information info@kaoko.com

The KAOKO™ Cruise Control is an aftermarket accessory. Any misunderstood, abused or incorrectly installed motorcycle accessory is a safety hazard that could cause injury or death. It's the rider's responsibility to understand the operation and purpose for which the KAOKO™ Cruise Control is designed, namely, for cruising, only when safe to do so. At all other times the control should be disengaged. The KAOKO™ Cruise Controls are to be used only by experienced and responsible riders.

Note: An adjustment to throttle assembly position may be necessary to suit KAOKO™ Cruise Controls. The throttle assembly position on aftermarket bars, and some OEM bars, is adjustable. The assembly can marginally be re-positioned along the handle bars slightly loosening the throttle assembly clamp screws, and then sliding the throttle assembly along the handle bars (left or right). Once done, firmly tighten the clamp screws to OEM torque specifications. This adjustment is generally not necessary.

Fitting & Operating Instructions :
Kit comprises: Friction body and nut, 2mm Allen Key, M8 x 45 cap screw and instructions

Step 1: Partially loosen all the clamp screws shown in area of picture 1.
Step 2: Completely remove the right hand side bar weight as shown in picture 2.
Step 3: Place the Kaoko Kit over the bar end spigot - per Picture 3.
Step 4: djust the friction nut up against the shoulder of the metal body.
Step 5: **Loosely** Assemble KAOKO™ Kit as shown in Picture 4. Adjust the hand guard to desired position and then firmly tighten the sup-plied M8 central retaining screw.

(There should be minimal clearance between the end of the throttle sleeve & the friction nut. This minimal clearance will close up when the friction nut is turned to engage).

It is now necessary to remove handguard clamp screws (pic 1) and in order to achieve sufficient clamping, wrap some thin layers of neatly trimmed aluminum foil around the handle bars where the clamp will tighten up. Finally tighten clamp screws shown in area of Picture 1
Step 6: Adjust grub screw per **maintenance** instruction below.

Operation: The friction nut has **left hand thread**. In readiness for engagement it must be adjusted so that it makes light contact with the thrust washer.

To Engage: While rolling on the throttle, the friction nut can be gripped between the small finger and palm of hand. This action tightens the nut and provides sufficient friction to set throttle to the desired opening. (The friction is such that the rider may still open and close the throttle. It simply has a slight stiffness to it.)

To Disengage: While rolling off the throttle, grip friction nut between small finger and palm of hand.
VERY IMPORTANT!!— The throttle should open and snap closed freely when correctly disengaged.

Maintenance: Remove kit annually. Unscrew friction nut and brush clean threads with mild soap. Apply petroleum jelly to threads and assem-ble. Adjust grub screw.

Note: The Grub Screw is set to provide the necessary resistance on thread of friction nut. The nut should have firm rotational resistance to be correct. The nut should be stiff turning. (Use 2mm Allen key)
(O-Ring cushion: 19.6mm I.D. x 2.4mm section — if replacement is required)

Indemnity:
It is advised that the use of the cruise control is at the sole risk of the rider and by his/her decision to use it he/she does indemnify the manufacturers or organizers, their agents, employees and officers against any claim or action by themselves, their dependents or any other third party arising out of any loss, damage, injury or death suffered.

2014.03.24—NM

Figure 1: ***Typical KAOKO Throttle Stabilizer Components*** rev: 30/11/2015

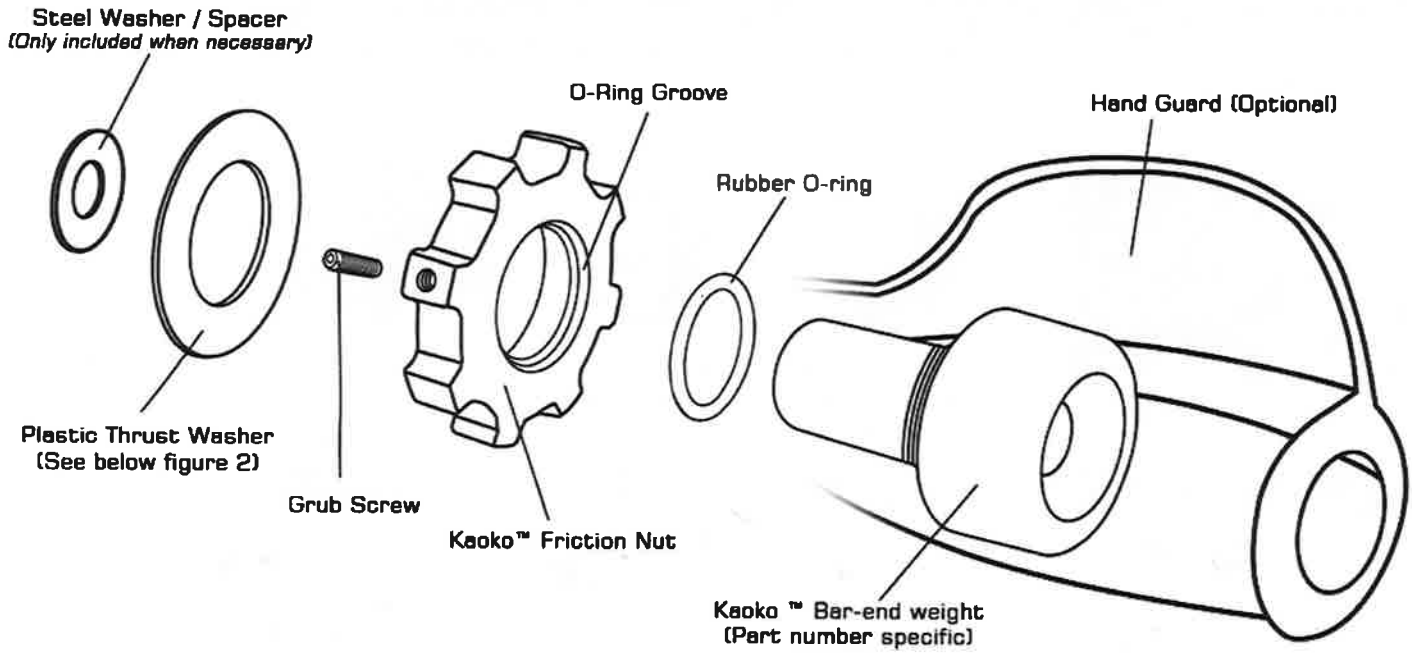

Figure 2: ***Thrust Washer Final Fitment***

Note: The KAOKO™ Thrust Washer (*ref: figure 1*) must *thrust* against the plastic throttle sleeve (*tube*) indicated below in figure 2.

The KAOKO ™ Thrust Washer must not thrust against the rubber throttle grip. Refer detailed instructions on reverse.

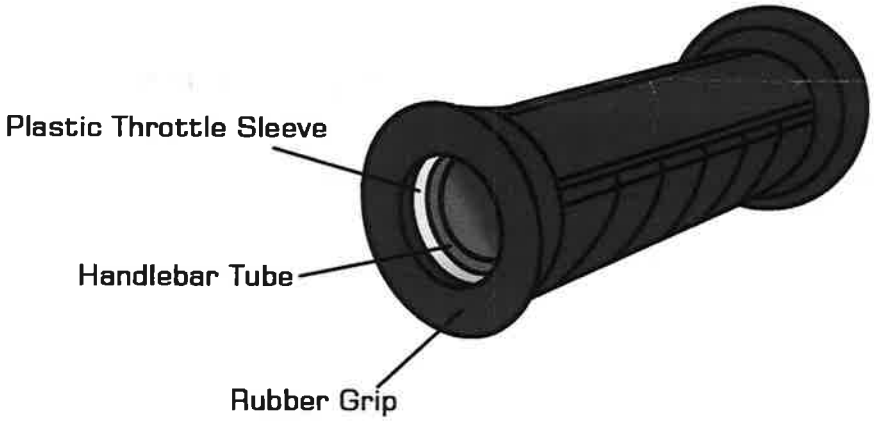

KAOKO™ ACCESSORIES AND PRODUCTS

Express Disclaimer, Exclusion of Liability, Indemnity and Safety Warning:

1. The accessories and products supplied by KAOKO™ are aftermarket accessories and products.
2. The use and employment of such accessories and products is at the sole risk and discretion of the user.
3. The user of such accessories and products further indemnifies KAOKO™ and its representatives against all claims and losses arising (including personal injuries, death, damage to property and any other losses) and involving such accessories and products.
4. KAOKO™ provides no warranty on accessories and products that it produces and distributes and does not aver that these accessories and products are fit for the purposes for which same are manufactured and intended.
5. KAOKO™ assumes **no** responsibility for and liability regarding any and all defects, deficiencies or otherwise in and attributed to its motor accessories and products.
6. KAOKO™ further assumes **no** responsibility for and liability regarding any prospective losses and claims for damages; be same actual, consequential or contingent and which in any way are associated with its motor accessories and products. In circumstances where accessories and products supplied are found to be of defective manufacture, KAOKO™ reserves its rights to replace such defective accessories and products, alternatively; effect a financial refund equivalent to the purchase price of such accessories and products as at the date of placement of order.
7. The application and affixing of KAOKO™ accessories and products to vehicles may necessitate or result in modifications being undertaken and this may result in manufacturer or otherwise warranties provided on such vehicles being affected and for that matter **volded**. In circumstances where the above occurs, KAOKO™ expressly denies being accountable regarding any liability and losses ensuing.
8. The application and affixing of KAOKO™ accessories and products may further result in usual vehicle operations and safety features being modified, overrode and for that matter discarded.
9. KAOKO™ accessories and products ought to be used by experienced and responsible riders only. The onus rests on the **user** of such KAOKO™ accessories and products to become properly familiarised with and understand the nature, operation and scope of the above accessories and products and further ensure that same are correctly affixed and used at all times and further not abused.
10. **Misapplication and abuse of such accessories and products can endanger the user and result in injury or death and further constitute safety hazards.**
11. The affixing and usage **advices** provided by KAOKO™ are for guidance purposes only and do not constitute specific fitment instructions. The onus rests on the **user** to ascertain and ensure proper and professional affixing and fitting to vehicles of the accessories and products and in seeking suitably qualified assistance in dealing with the above.
12. Prior to resorting to using KAOKO™ accessories and products, it is recommended that the user seek independent advice regarding the integrity and suitability of above accessories and products and in fulfilling the user's needs.
13. KAOKO™ accessories and products should only be fitted to new motorcycles and those that are in original condition, having not been involved in any accidents, being dropped, damaged or the subject of repair. Where KAOKO™ accessories and products are fitted to motorcycles not in original condition there is the risk that the operation of KAOKO™ accessories and products will be compromised and damaged. **In all of the above events, KAOKO™ does not accept liability.**